Fruitdale Sanitation District
4990 Miller St.
Wheat Ridge, CO 80033
Phone: 303-424-5476
Fax: 303-456-5077

Applicant Instructions

Enclosed are an application form and a partial list of Rules and Regulations.

Please read the Rules and Regulations carefully then fill out the application and return it to the district office.

Once we have your completed application form we will compute your connection fee based on the information you have supplied. We will then send this information to you. (Please supply contact information where you can be reached if the district has any questions concerning your application.)

All connections to the District sewer system shall be made only by a licensed drainlayer.

We have enclosed a separate packet for the licensed drainlayer.

All connection fees must be paid in full, and drainlayer's license and insurance shall be current before any work can begin.

If you have any questions feel free to contact the district.

District Rules & Regulations

Section 3.02. Independent Connections. Each separate building and each Single Family Unit shall have an independent connection to the facilities of the District, except:

(a) Where a parcel of land has more than one separate building thereon, under one ownership, application may be made to the Board of Directors to allow the buildings to be connected through a single sewer service line. The Board will determine initially whether such service will be permitted and upon what conditions, and may then enter into an agreement with the property owner setting forth such condition. Such agreement shall be recorded in the records of the Jefferson County Clerk and Recorder.

(b) Where a parcel of land has one or more separate multi-unit building or buildings thereon, application may be made to the Board for service to each multi-unit building through a single sewer service line. The Board will determine initially whether such service will be permitted and upon what conditions and may then enter into an agreement with the property owner setting forth such conditions. Such agreement shall be recorded in the records of the Jefferson County Clerk and Recorder.

Section 3.03. Responsibility. The District has a substantial public interest in protecting its public sewer facilities from potential problems which may arise from the improper installation or disconnection of a service line including, but not limited to, infiltration, exfiltration and the introduction of an accumulation of septic sewage into the public sewer. Accordingly, the District has certain requirements for the installation, connection, inspection and disconnection of service lines, even though the service line belongs entirely to the owner of the connected property. After issuance by the District of a permit for connection of a service line to the public sewer, the applicant shall, at his own expense, engage the service of a drainlayer licensed by the District, to construct a sewer service line in accord with these Rules and Regulations. A representative of the District shall inspect the completed service line installation before the sewer trench is backfilled, to assure such compliance with these rules and regulations as may be required for the protection of the Districts public sewer facilities.

Section 3.10. Service Line Maintenance. It shall be the responsibility of the property owner to keep the sewer service line between the building connected and the public sewer system clean and clear of any obstructions, including tree roots, and to keep said service line in good repair at all times, so that exfiltration and infiltration are kept within District standards; so that there shall be no accumulation of septic sewage therein and so as to avoid obstruction or blockage of the public sewer.

Section 3.16. Miscellaneous Drains. Roof drains, footing drains, storm drains, sump pumps and similar connections designated to accommodate storm or sub-surface waters shall not be made to any service line or to the public sewer.

Section 4.02. Performance of the Permit. No person other than a licensed drainlayer shall connect a service line to or disconnect a service line from the facilities of the District as allowed by the permit.

Section 4.03. Separate Permit. Each permit shall specify the number of connections or disconnections allowed to be made to the public sewer system. The manner of connection or disconnection shall be determined and all permit fees shall be calculated in accordance with the relevant rules of the District. A permit shall apply only to that property specified within the application and shall not be transferable to any other property. A permit shall expire automatically 180 days after the date of issuance of the permit.

Section 6.01. Sewer Service Charges. A sewer service charge in the amount set forth in the Schedule of Fees and Charges in Appendix 3 attached hereto will be assessed monthly to all connectors to the public sewer system of the District. The sewer service charge is due upon receipt of the statement therefore and shall be delinquent 30 days after the billing date. Delinquent charges are subject to a late charge of one percent per month on the unpaid balance plus a $1.00 per month handling fee.

Section 6.09. Connection of Old Facilities. No sewer service line may be connected to any public sewer system if that service line is connected to either a septic tank or cesspool.

Application for connection to sanitary sewer system served by Fruitdale Sanitation District

Customer Data: Date: _____

Owners Name: _____

Mailing Address: _____

Location of Proposed Service:

Address: _____
(Building Number) Street Name/ Number

Legal Description: _____
(Lot No.) (Block) Subdivision / Addition

Service Description: ☐ New Service ☐ Modification to existing service (explain below)

Sewer Service:

Service Line Size: _____ in.

Location of main sewer line where tap will connect: _____

Water Service:

Water tap size: _____ in.

Water Supplier: _____

(water tap size will be varified)

Classification for SFRE Assignment

Residential:

- ○ Single Family Detached Dwelling
- ○ Multi-Family Structure (number of units)
- ○ Other (explain below)

Number of acres being developed _____

Other Than Residential:

- ○ Commercial
- ○ Industrial
- ○ Public
- ○ Other (explain below)

Number of buildings connected to sewer _____

Use of Buildings: _____
(Please submit any plans or drawings with this application)

Name of Licened Drain Layer: _____

Remarks:

Note: (1) If the date of physical connection and certification therof is after January 1st of any year, the district may be due greater payment amount.

Dainlayer
Notes

This is a packet for licensed drainlayer's planning to work in Fruitdale Sanitation District.

Enclosed are a list of Rules and Regulations, an application for a Drain Layers License and a set of specifications for work in the district.

The Rules and Regulations included in this packet are applicable to new connections but is not a complete list, the complete list of Rules and Regulations are available on request.

We have included an application for a drainlayer's license, if you have already filled out an application with the District you can simply call and make sure your insurance and fees are current and up to date.

The specifications in this packet are a suggested list of materials and construction methods that are preferred within the District. These specification also include plans for a monitoring manhole, this manhole shall be installed in all commercial and industrial connections within the District.

The District will inspect all new connections. 24 hours notice is customary for inspections, also no part of the trench and pipe shall be covered before an inspection can be done.

If you have any questions feel free to contact the district.
Address: 4990 Miller St.
Phone: 303-424-5476
Fax: 303-456-5077

District Rules & Regulations

Section 3.04. Size of Sewer Service Lines. The sanitary sewer service line shall not be less than four inches in diameter and shall be sound throughout. The sewer service line shall in no instance be smaller than the building drain. At locations where the public sewer is less than four inches larger than the service line and no appropriate fitting exists in the public sewer, the connection to the public sewer shall be made by constructing a manhole in compliance with the Districts standards for such construction.

Section 3.06. Grade and Alignment. Sewer service lines shall be laid on a uniform grade, free of ups and downs, to good alignment, and free of abrupt bends, unless appropriate fittings are used. Grade shall not be flatter than one percent or one-eighth inch per foot.

Section 3.07. Installation. Sewer service line construction procedures and techniques shall be the responsibility of the licensed drainlayer and shall conform to American Society for Testing and Materials (A.S.T.M.) or American Water Works Association (A.W.W.A.) standard specifications applicable to the particular pipe and joint materials in use. The drainlayer's procedures and operations shall also conform to all requirements of any entities exercising jurisdiction over occupational safety and health.

Section 3.09. Inspection. No part of the trench in which the completed sewer service line is laid shall be backfilled, or otherwise covered, until final inspection and approval is made by the Inspector for the District. Arrangements shall be made for the District's Inspector to make his inspection of the completed construction prior to the start of backfill operations. In any case when the drainlayer and the Inspector for the District cannot agree upon the acceptability of the installation, the matter shall be investigated by the Engineer for the District and his decision shall be final. Connections made without inspection by the District shall void the tap permit and no refund shall be made of the permit fee.

Section 3.11. Interceptors (Traps). The District will review all plans for proposed connections to the public sewer to determine whether or not an interceptor will be required. If, in the opinion of the District's Engineer, an interceptor shall be necessary in order to prevent grease, fats, petroleum products, or deleterious substances from entering the public sewer system, the District shall have the right to specify the kind, nature and capacity of the interceptor to be installed on site before any permit shall be issued and to require the same to be installed prior to the connection to the public sewer system.

Section 3.13. Unauthorized Connections. Any connection made to a public sewer line without first obtaining (a) a permit, (b) a drainlayer's license, and (c) the approval and consent of the District Engineer or his designee, shall be disconnected by the District at the cost of the person making such unauthorized connection. If any person violates the Rules and Regulations of the District governing the installation, connection and repair of the service lines, such connections to the public sewer line shall be disconnected by the District Engineer or his designee at the cost of the person making such unauthorized connection. Such costs of disconnection until paid shall constitute a lien against the property upon which such unauthorized connection was attempted to be made. In the event that the unauthorized connection was made by a licensed drainlayer, he may be subject to the revocation of his drainlayer's license.

Section 3.16. Miscellaneous Drains. Roof drains, footing drains, storm drains, sump pumps and similar connections designated to accommodate storm or sub-surface waters shall not be made to any service line or to the public sewer.

Section 4.02. Performance of the Permit. No person other than a licensed drainlayer shall connect a service line to or disconnect a service line from the facilities of the District as allowed by the permit.

Section 4.03. Separate Permit. Each permit shall specify the number of connections or disconnections allowed to be made to the public sewer system. The manner of connection or disconnection shall be determined and all permit fees shall be calculated in accordance with the relevant rules of the District. A permit shall apply only to that property specified within the application and shall not be transferable to any other property. A permit shall expire automatically 180 days after the date of issuance of the permit.

Section 4.06. Permits by Others. No permit by the District shall be taken as authority for the making of any cut in a road or Street, or in lieu of any permit required by any other regulatory body.

Section 5.01. License Required. No person shall construct or repair a service line or construct a repair a public sewer within the District without first obtaining a license to do so from the District.

Section 5.07. Issuance of License. A drainlayer's license shall be granted by the action of the Board or its authorized representative and shall be valid for a period of one year, unless revoked as herein prescribed. Licenses may be renewed by the District if the work of the drainlayer, under a valid license, has been satisfactory to the Board or to its duly authorized representative, and upon the furnishing of a surety bond, certificate of liability insurance, certificate of compliance with the Workmen's Compensation Act of Colorado, and upon payment of the proper fee.

Section 5.08. Licensed Drainlayer Not to Allow Others to Use Name. No licensed drainlayer shall allow his name to be used, directly or indirectly, by any other person to obtain a permit to do any work within the District.

Section 6.09. Connection of Old Facilities. No sewer service line may be connected to any public sewer system if that service line is connected to either a septic tank or cesspool.

Fruitdale Sanitation District

4990 Miller Street
Wheat Ridge, Colorado 80033-2216
Phone: (303) 424-5476
Fax: (303) 456-5077

APPLICATION
FOR
DRAIN LAYERS LICENSE

LICENSE NUMBER _____

APPLICANTS NAME _____
APPLICANTS ADDRESS _____
APPLICANTS PHONE# _____ APPLICANTS EMAIL _____

CALENDAR YEAR FOR LICENSE SOUGHT _____

HAVE YOU BEEN LICENSED BY THE DISTRICT BEFORE? _____YES _____NO
IN WHAT YEARS DID YOU HOLD A LICENSE_____

IN WHAT OTHER SANITATION DISTRICTS OR MUNCIPALITIES ARE YOU LICENSED AS A DRAIN LAYER?
_____

YEARS OF EXPERIENCE AS A DRAIN LAYER _____

NOTIFICATION TO APPLICANT

RULES AND REGULATION OF FRUITDALE SANITATION DISTRICT STATE IN ARTICLE V SECTION 5.01 - LICENSE REQUIRED. No person shall construct or repair a service line or construct or repair a public sewer within the District without first obtaining a license to do so from the district

NO LICENSE WILL BE ISSUED UNTIL ALL PAPERWORK IS SUBMITTED

1. LICENSE FEE OR RENEWAL FEE OF $10.00
2. STATEMENT OF INSURANCE ($1,000,000)
3. STATEMENT OF WORKERS COMPENSATION
4. LICENSEE'S BOND, WITH ACCEPTABLE SURETY ($10,000)

THE APPLICANT AGREES, IF LICENSED BY THE DISTRICT, TO:

1. COMPLY WITH ALL OF THE TERMS, PROVISIONS, AND REQUIRMENTS OF THE RULES AND REGULATIONS OF THE FRUITDALE SANITATION DISTRICT WITH RESPECT TO THE LAYING AND MAINTENANCE OF SANITARY SEWER LINES, THEIR CONNECTION TO THE PUBLIC SEWER LINES AND WITH RESPECT TP PAYMENT OF FEES.

2. REPAIR, AT ITS OWN COST, ANY DAMAGE TO THE PUBLIC SEWER LINE WHICH IS SHOWN TO HAVE BEEN CAUSED BY IT AS A RESULT OF OPENING, UNCOVERING, OR LAYING SANITARY SEWER LINES OR CONNECTING SANITARY SEWER LINES TO THE PUBLIC SEWER LINES.

SIGNATURE OF APPLICANT _____ DATE OF APPLICATION_____
APPROVED BY _____ DATE APPROVED _____

SUGGESTED MATERIALS AND PROCEDURES
FOR
SEWER SERVICE LINE INSTALLATION

All PVC gravity sanitary sewer pipe and fittings should be furnished with factory-attached compression joint material.

PVC pipe should be supplied with the coupling integrally molded to the pipe barrel. All joints shall be bell and spigot.

Pipe joints should be made using an integral bell with an electrometric gasket push-on type joint or by using machined couplings of a sleeve type with rubber ring gaskets and machined pipe ends to form a push-on type joint.

All fittings and couplings should be of the "0" ring push-on type as required for non-pressure sewer pipe.

Electrometric pipe joint gaskets should be lubricated, prior to pipe placement, with a proper lubricant supplied or specified by the pipe manufacturer.

Pipe laying should proceed upgrade with the pipe spigot ends pointing in the direction of flow, Pipe should be laid on a minimum grade of 2%.

Mechanical tap connection of service lines to the District main line must be made with a machine-tapping device and an appropriate watertight factory fabricated saddle branch fitting with stainless steel bands.

Wye branches should be inclined upward at an angle of approximately 45 degrees from a horizontal line.

Sewer service riser pipe, the same diameter as the service line, should be extended upward to approximately 12-feet below the finished ground surface.

Sewer service line pipe should be covered and protected with a minimum of 3-feet of backfill material. Where the pipe will have less than 3-feet of cover it should be protected by concrete encasement or other suitable means.

A clean-out assembly should be installed at sharp bends in the sewer service alignment, at 100-foot intervals, and where otherwise necessary to provide access to the line for cleaning.

The following material deficiencies should be avoided:

Fractures or cracks through the shell of the pipe socket.

Chips, fractures or gouges on the barrel of the pipe.

Broken or large blisters on pipe and fittings.

Improper size or dimensions.

Deformation of the pipe or fittings.

Uniformly sized granular pipe bedding material should be placed and compacted for a minimum of 6-inches under, alongside and on top of the entire length of service line pipe.

In the event that the excavated trench bottom is not stable, 2" — 3" diameter stabilization rock should be placed below the trench bedding material to make a firm foundation.

All excavated sewer service line trench should be kept free from groundwater. Under no circumstance may groundwater be allowed to enter the District sewer main.

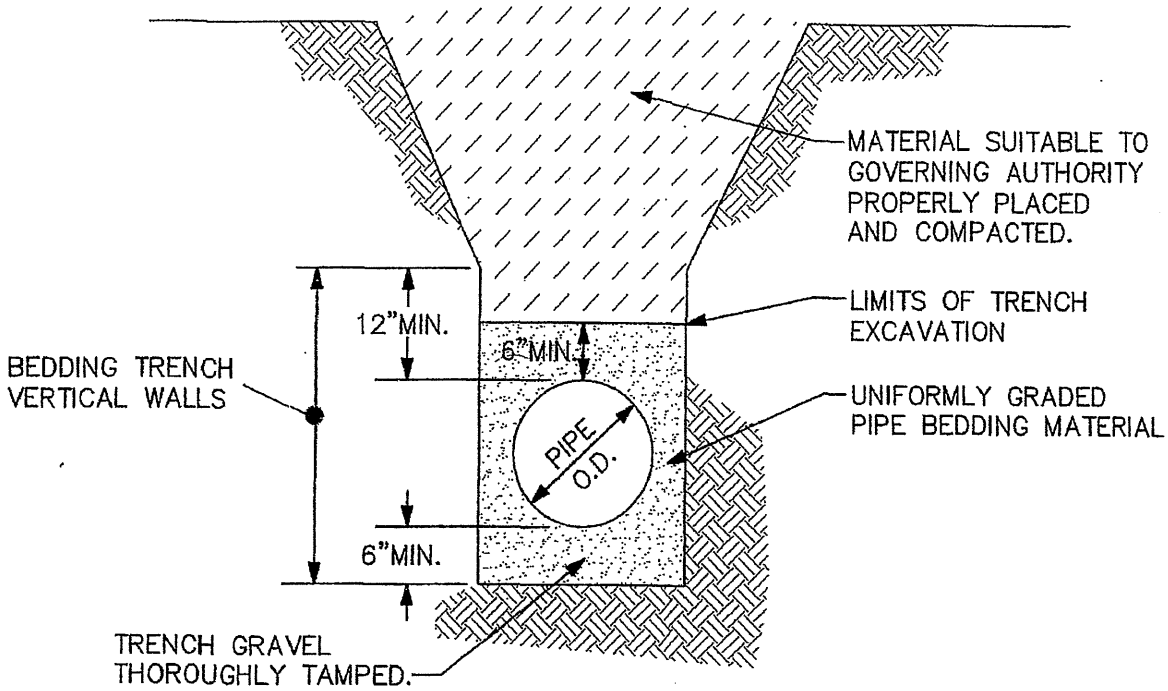

SUGGESTED PIPE BEDDING DETAIL

N.T.S.

PATH: S/PROJECTS/F24-0/PipeBedding.dwg

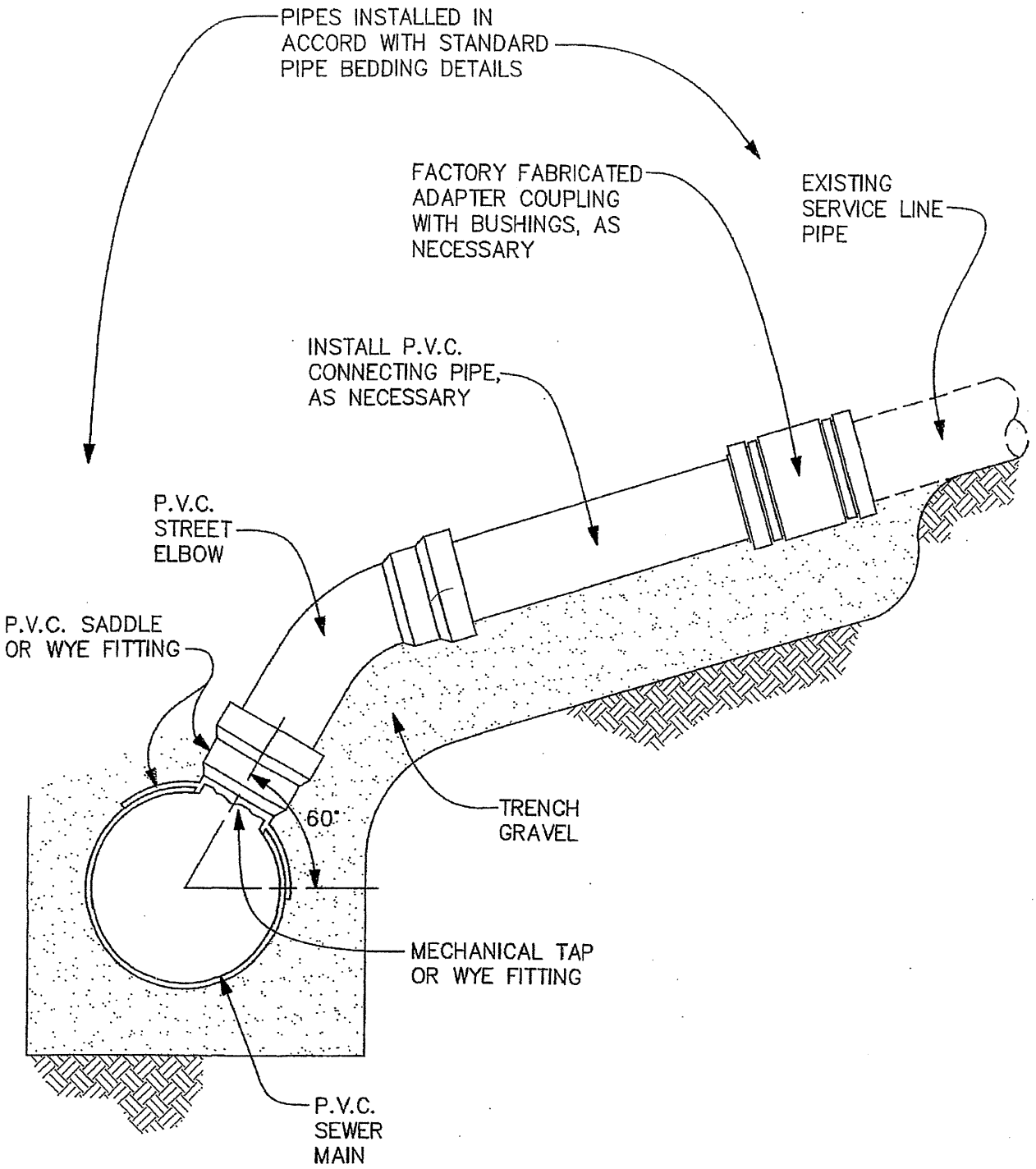

SERVICE CONNECTION DETAIL

N.T.S.

1. 22 1/2° LONG RADIUS BEND
2. SEWER LINE
3. FOR SEWER SERVICE TAPS TO EXISTING LINES USE A 45° WYE SADDLE.
4. "PERMA-JOINT STOP OR EQUAL. 6" STEEL FENCE POST AT END OF LINE TO 2'-0" ABOVE GROUND.
5. 1'-0" OR AS STAKED.
6. SERVICE LINE. SEE SPECIFICATIONS. GRADE 1/4" DROP PER FOOT.
7. CENTER OF WYE BRANCH TO BE PLACED IN UPPER THIRD OF SEWER MAIN.

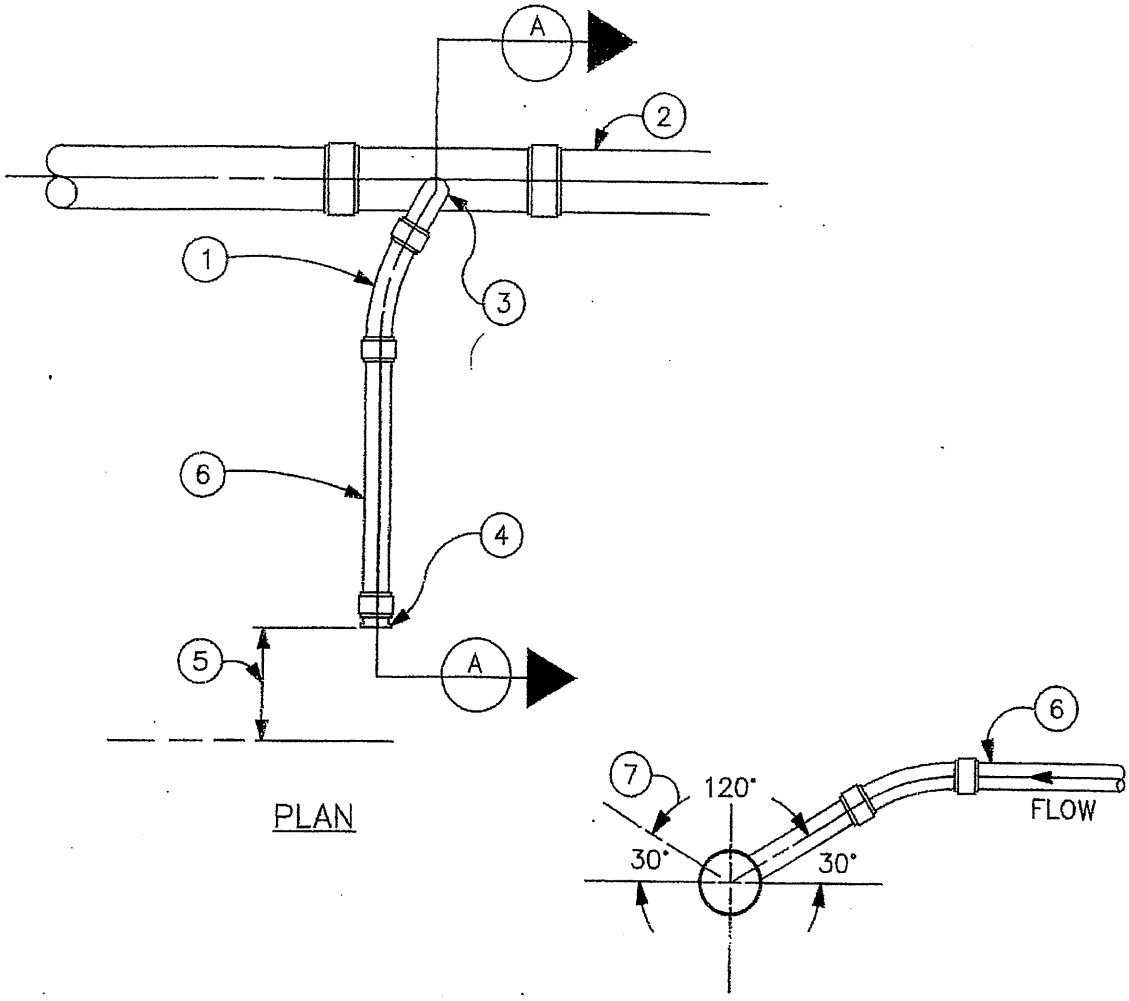

SEWER SERVICE CONNECTION

N.T.S.

PATH:S/PROJECTS/F24-0/SewerConnect.dwg

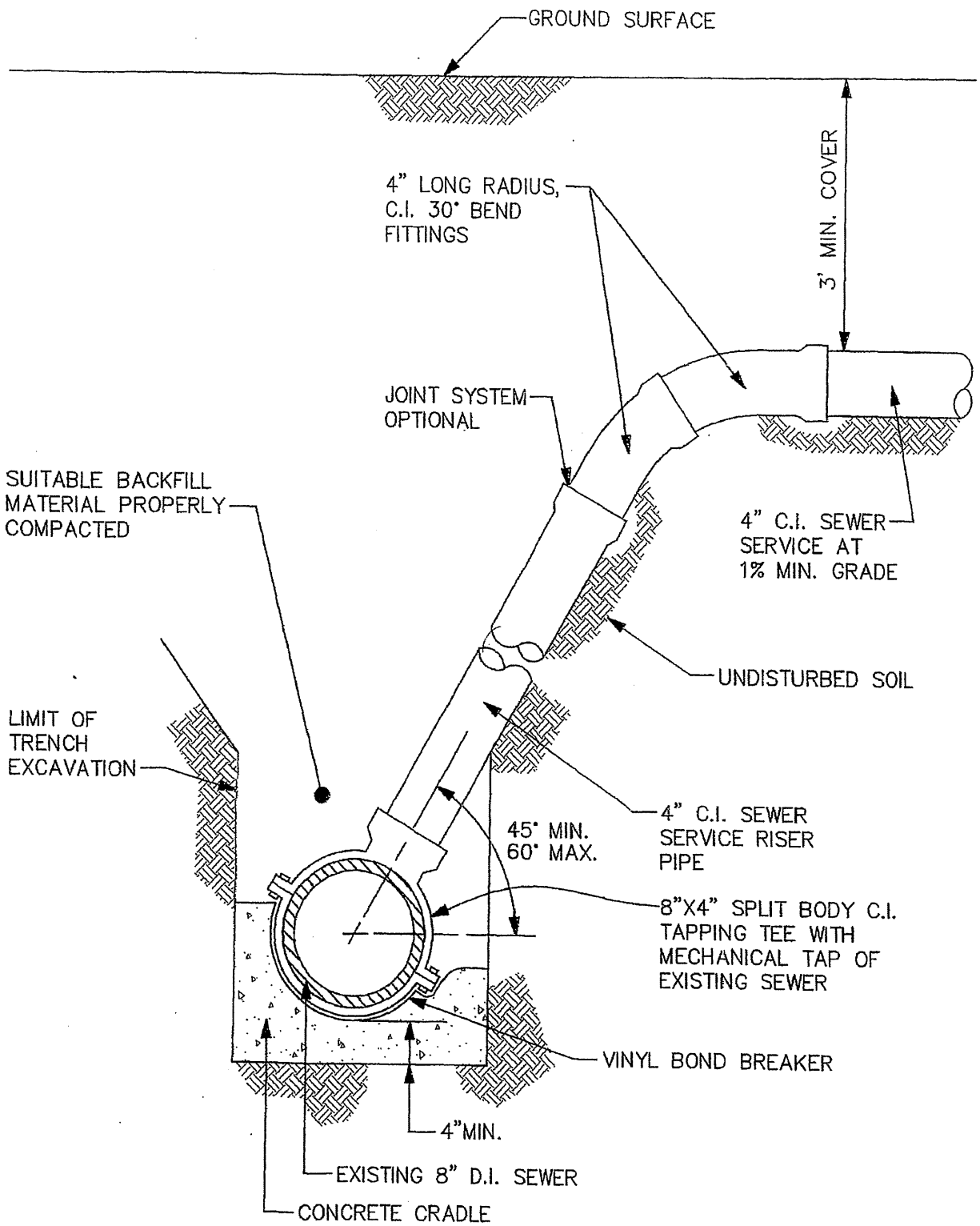

SECTION THROUGH SEWER CONNECTION

N.T.S.

PATH: S/PROJECTS/P24-0/Section thruSewer.dwg

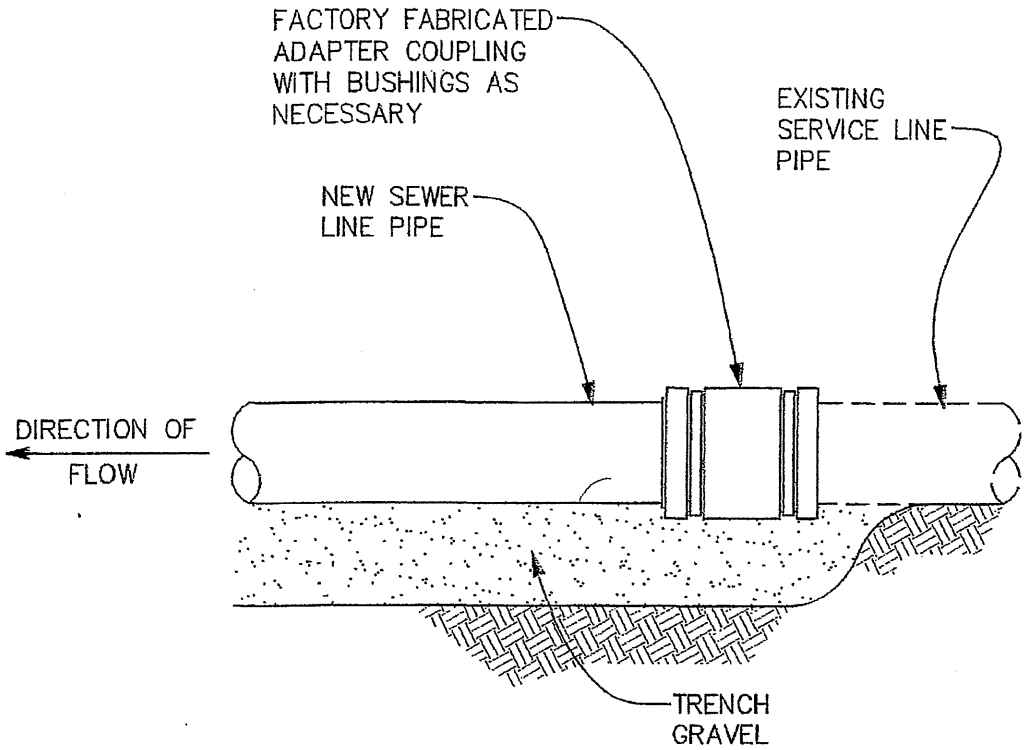

CONNECTION TO EXISTING SEWER LINE

N.T.S.

NOTES:

1. J–MARK, J–6516 LAMP HOLE COVER
2. 4" SERVICE LINE RISER PIPE
3. 4" 30° BEND
4. BACKFILL & COMPACT TO SPECIFICATIONS
5. BELL TYPE PLUG
6. 4"X4" WYE WITH 45° ELBOW (ALL BELL FITTINGS)
7. END 4" PVC 3" FROM FINISH GRADE
8. CONCRETE SLAB

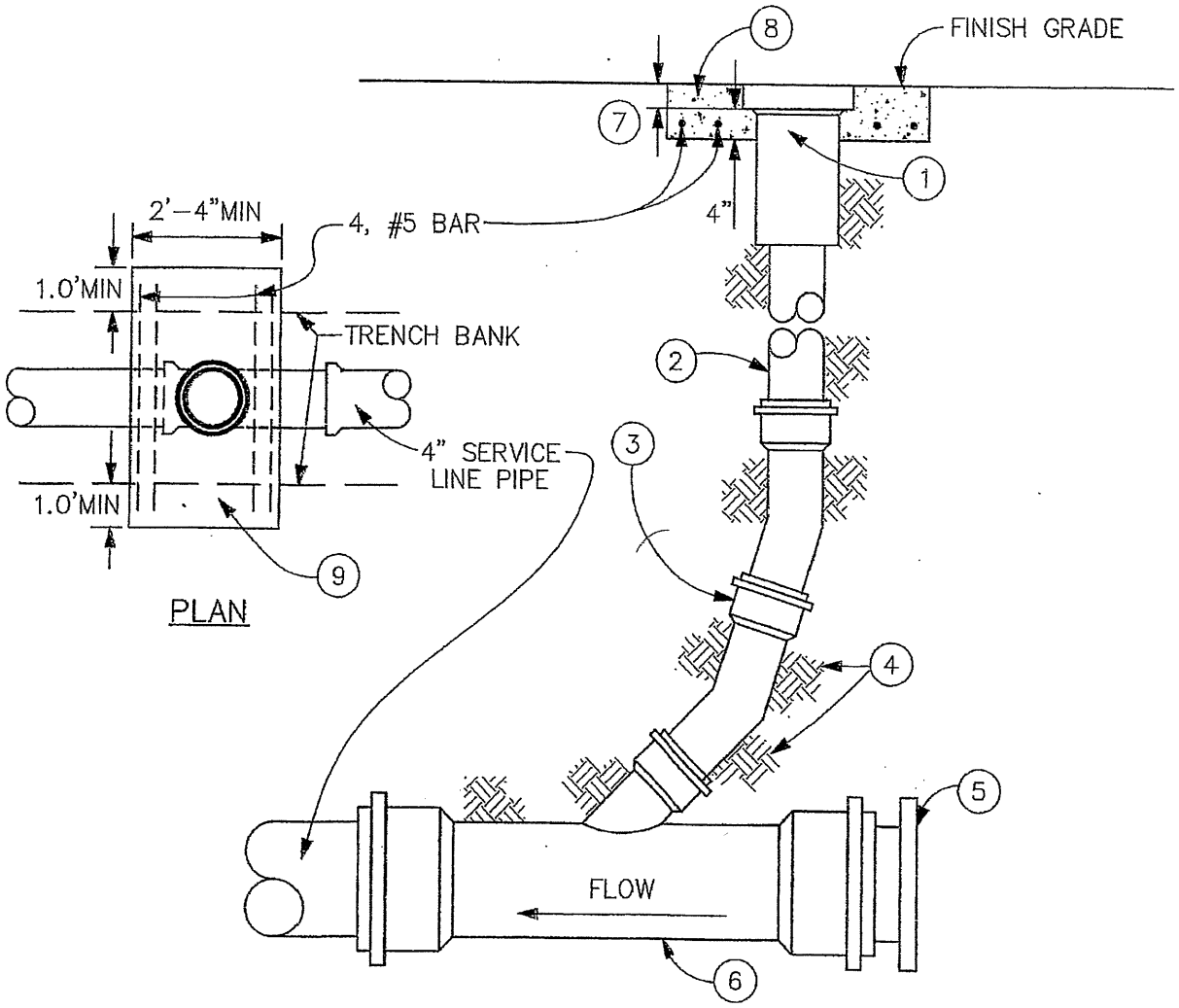

SEWER CLEAN–OUT DETAIL

N.T.S.

SPECIAL TYPE B MONITORING MANHOLE

NOTE WELL: THIS TYPE B MONITORING MANHOLE SHALL BE INSTALLED ONLY WHEN SPECIFIED, IN WRITING, BY THE DISTRICT.

NOTES:

1. STEPS SHALL BE POLYPROPYLENE ENCASED STEEL BARS SIMILAR AND EQUAL TO M. A. INDUSTRIES NO. PS-1-PF.
2. HEAVY DUTY CAST IRON MANHOLE ENTRY FRAME WITH SOLID LID AND LOCKABLE INNER LID. INCLUDING SADDLE PLATE FOR LOCK, SHALL HAVE A MINIMUM CLEAR OPENING OF 22-INCHES, SHALL BE DESIGNED TO SUSTAIN AN H20 WHEEL LOAD AND SHALL BE SIMILAR AND EQUAL TO NEENAH FOUNDRY COMPANY NO. R-1755-E.
3. ALL CONCRETE SHALL BE TYPE II MODIFIED, WITH A MINIMUM COMPRESSIVE STRENGTH OF 3750 psc AT 28 DAYS.
4. REBAR BENDS AND LAPS SHALL BE 12" MINIMUM.

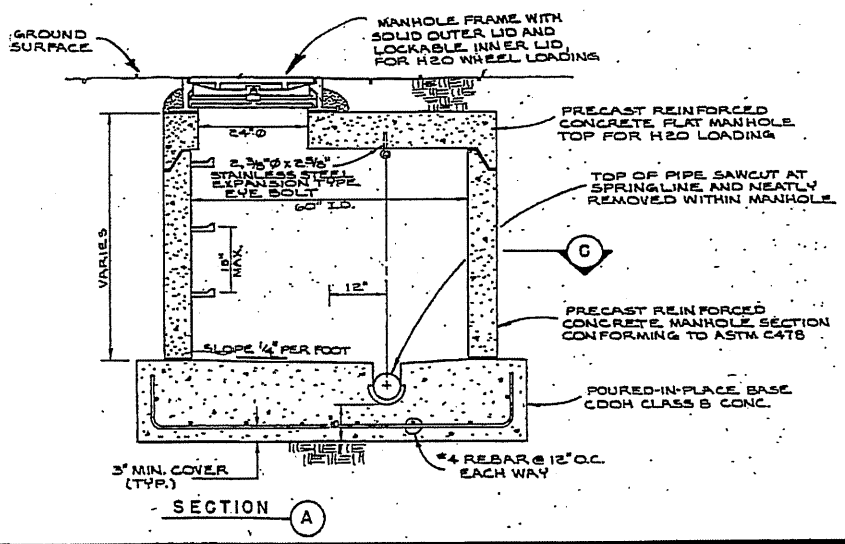

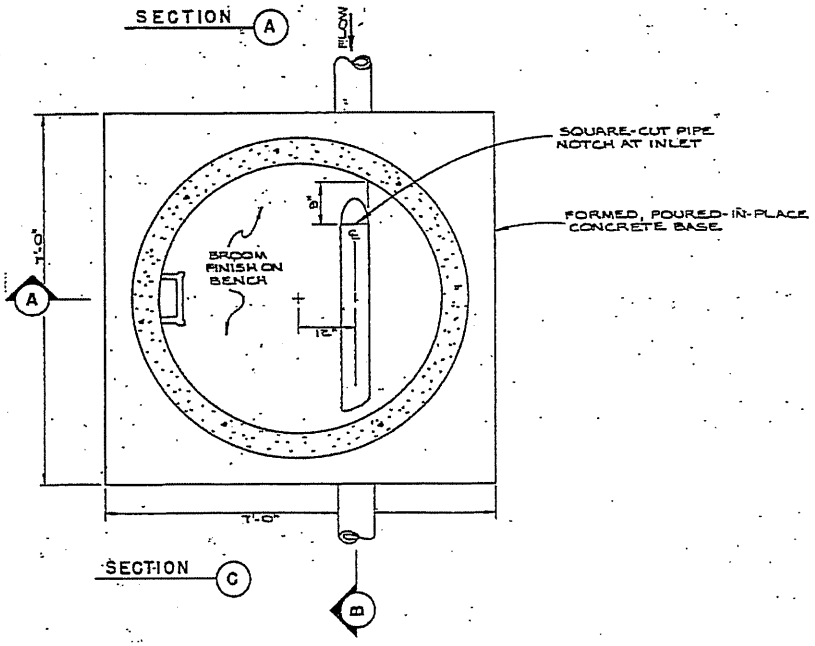

SHEET NO. 1 OF 1	PROJECT NO. F 24-124	DETAILS FRUITDALE SANITATION DISTRICT WHEAT RIDGE, COLORADO

LANE ENGINEERING SERVICE, INC.
9500 WEST 14th AVENUE
LAKEWOOD, COLORADO 80215-4716
303-233-1681